DG-BLU

Automatic pressurization system with inverter

Clean water

Domestic use

Civil use

ALL IN ONE

INSTALLABLE

QUIET

COMPACT

CONSTANT PRESSURE

EASY TO USE

PRODUCT DESCRIPTION

DG-BLU is a cutting-edge, automatic pressurization system featuring a high-efficiency, self-priming pump with multiple impellers. It comes complete with a storage tank, pressure and flow sensors, and a check valve, all designed to work quietly and efficiently**.**

This compact powerhouse stands out for its advanced electronic inverter control, which intelligently manages the system performance by:

- keeping the pressure constant according to water usage;
- monitoring hydraulic and electrical conditions to safeguard against malfunctions;
- allowing for integration with another DG-BLU unit through an optional expansion card;
- adapting seamlessly to any type of pressurization system, even existing ones;
- reducing electrical consumption with lower startup and running currents, achieving greater energy efficiency.

INSTALLATION AND USE

※ **DG-BLU** is designed to cater to the needs of single and two-family homes.

※ **DUAL-DG-BLU** units are pre-assembled pump systems, perfectly suited for multi-unit residences.

TECHNICAL DATA

※ Power supply: **1~ 230 V** ± 10%

※ Frequency: **50/60 Hz**

※ Insulation: **class F**

※ Maximum current absorbed:
- **3.5 A** DG-BLU 2
- **7.5 A** DG-BLU 3
- **10 A** DG-BLU 5

※ Maximum power input P1:
- **0.6 kW** DG-BLU 2
- **1.0 kW** DG-BLU 3
- **1.5 kW** DG-BLU 5

※ Protection rating: **IP X4**

※ Set point from the factory: **3 bar**

※ 1.5 metres cable with Schuko plug

APPLICATION LIMITS

- Manometric suction head up to **8 m**
- Liquid temperature between **0 °C** and **+40 °C**
- Ambient temperature between 0 °C and **+40 °C**
- Max. port pressure **4 bar**
- Max pressure **10 bar**
- Continuous running duty **S1**

PATENTS - TRADE MARKS - MODELS

- Registered community model No. 015048622-0001

CERTIFICATIONSIN PROGRESS

WRAS APPROVED PRODUCT · ATTESTATION DE CONFORMITÉ SANITAIRE ACS · NSF Certified to NSF/ANSI/CAN 61 & NSF/ANSI 372 · C US

PERFORMANCE CURVES

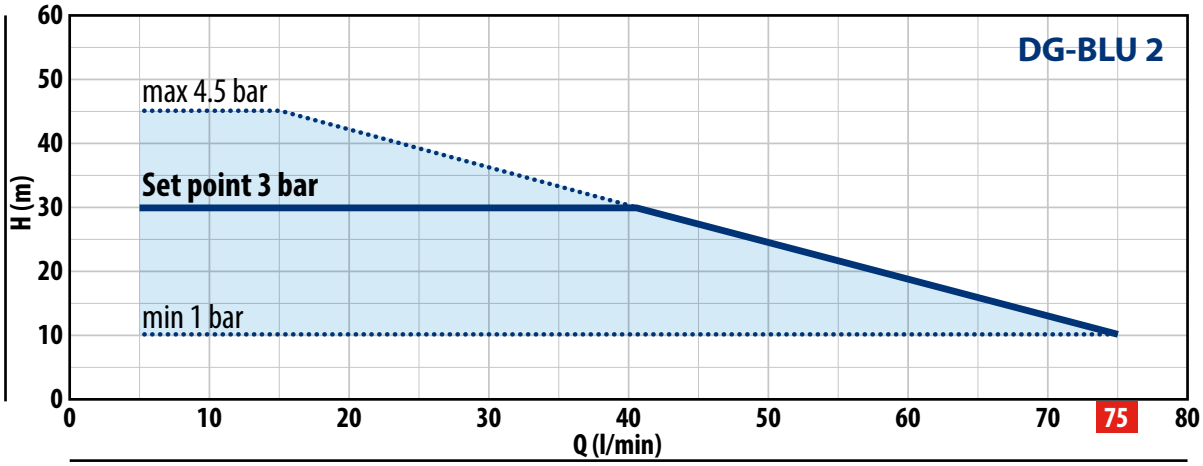

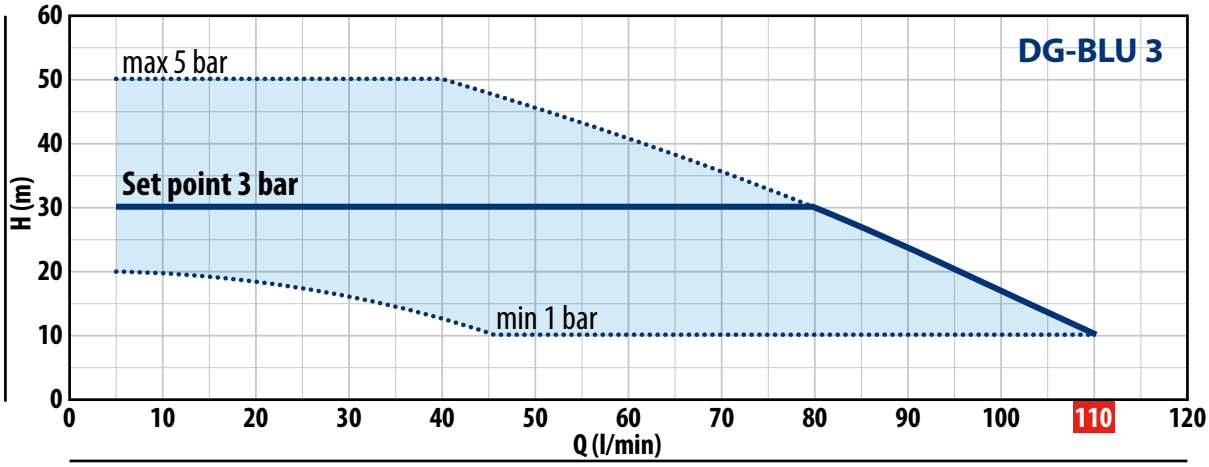

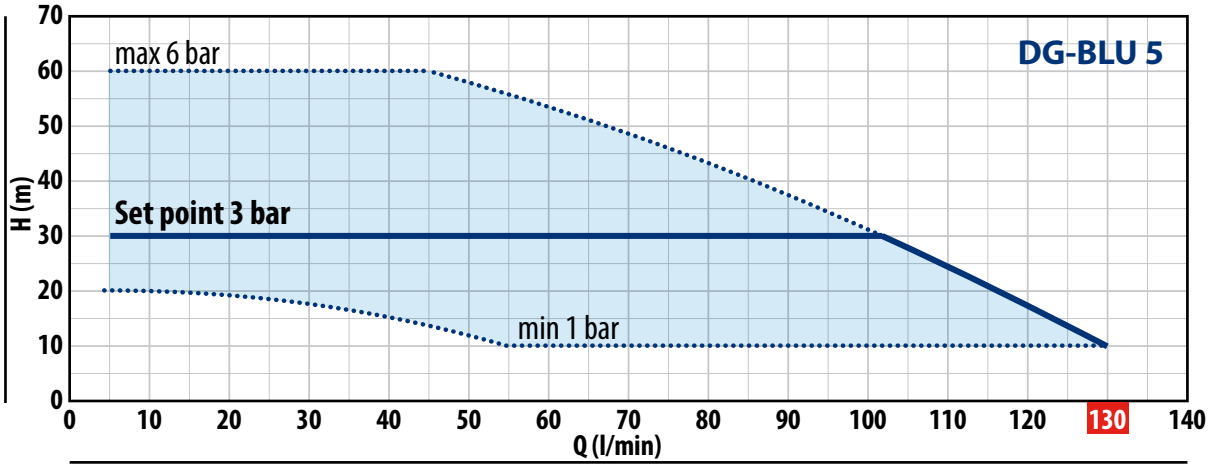

TYPE	POWER P2			PERFORMANCE		PERFORMANCE (ADJUSTABLE SET POINT)					
				Q	H	Set Point Min		Set Point Calibration Std		Set Point Max	
Single-phase	kW	HP	▲	l/min	metres	bar	l/min	bar	l/min	bar	l/min
DG-BLU 2	0.55	0.75		5 – **75**	45 – 10	1.0	5 – **75**	**3.0**	5 – **40**	4.5	5 – 15
DG-BLU 3	0.75	1	IE3	5 – **110**	50 – 10	1.0	45 – **110**	**3.0**	5 – **80**	5.0	5 – 40
DG-BLU 5	1.1	1.5		5 – **130**	60 – 10	1.0	55 – **130**	**3.0**	5 – **102**	6.0	5 – 45

Q = Flow rate **H** = Total manometric head

Performance curves comply with EN ISO 9906 Grade 3B tolerance limits.

▲ Three-phase motor efficiency (IEC 60034-30-1)

DG-BLU

PERFORMANCE CURVES FOR A GROUP OF TWO DG-BLU UNITS

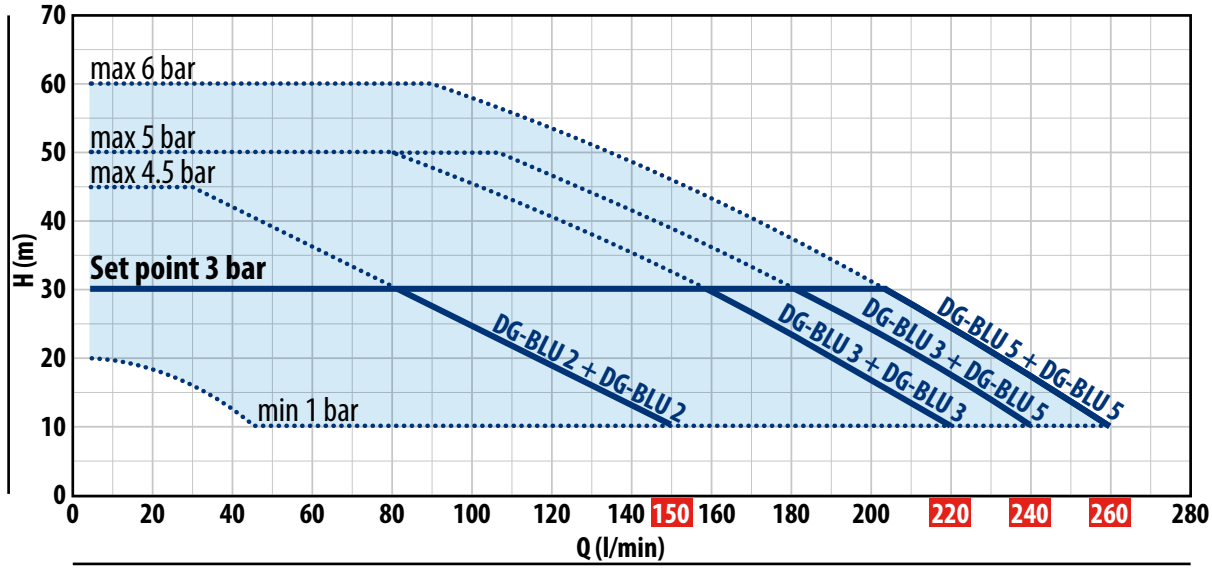

TYPE	POWER P2			PERFORMANCE		PERFORMANCE (ADJUSTABLE SET POINT)					
				Q	H	Set Point Min		Set Point Calibration Std		Set Point Max	
Single-phase	kW	HP	▲	l/min	metres	bar	l/min	bar	l/min	bar	l/min
DUAL DG-BLU 2+2	0.55+0.55	0.75+0.75	IE3	5 – **150**	45 – 10	1.0	5 – **150**	**3.0**	5 – **80**	4.5	5 – **30**
DUAL DG-BLU 3+3	0.75+0.75	1+1		5 – **220**	50 – 10	1.0	45 – **220**	**3.0**	5 – **160**	5.0	5 – **80**
DUAL DG-BLU 3+5	0.75+1.1	1+1.5		5 – **240**	50 – 10	1.0	45 – **240**	**3.0**	5 – **181**	5.0	5 – **107**
DUAL DG-BLU 5+5	1.1+1.1	1.5+1.5		5 – **260**	60 – 10	1.0	55 – **260**	**3.0**	5 – **204**	6.0	5 – **90**

Q = Flow rate **H** = Total manometric head

Performance curves comply with EN ISO 9906 Grade 3B tolerance limits.

▲ Three-phase motor efficiency (IEC 60034-30-1)

TYPICAL INSTALLATION

ABOVE GROUND
(drawing from a shallow tank or well)

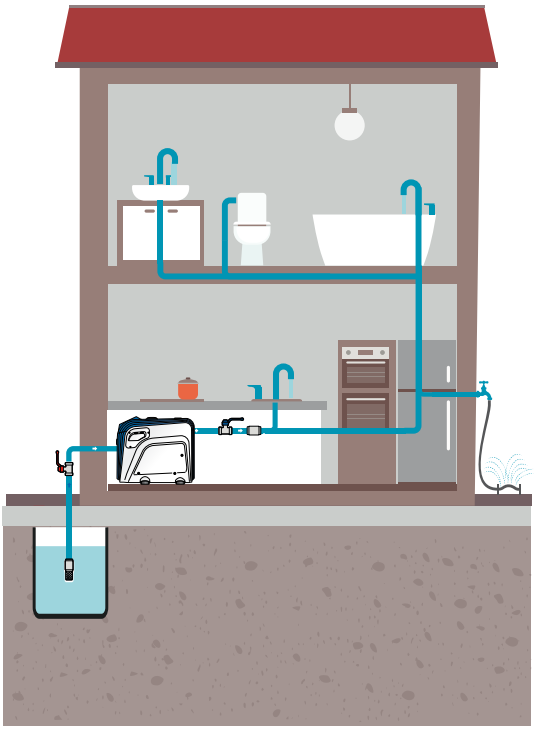

BELOW GROUND
(tank or aqueduct)

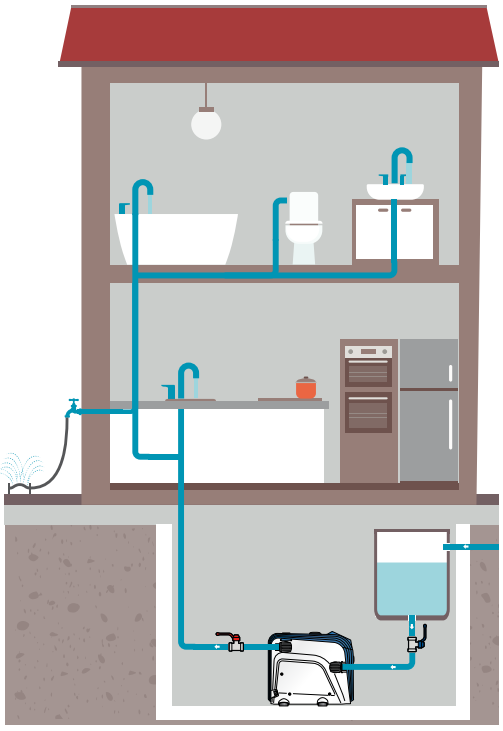

DIMENSIONS AND WEIGHTS (mm)

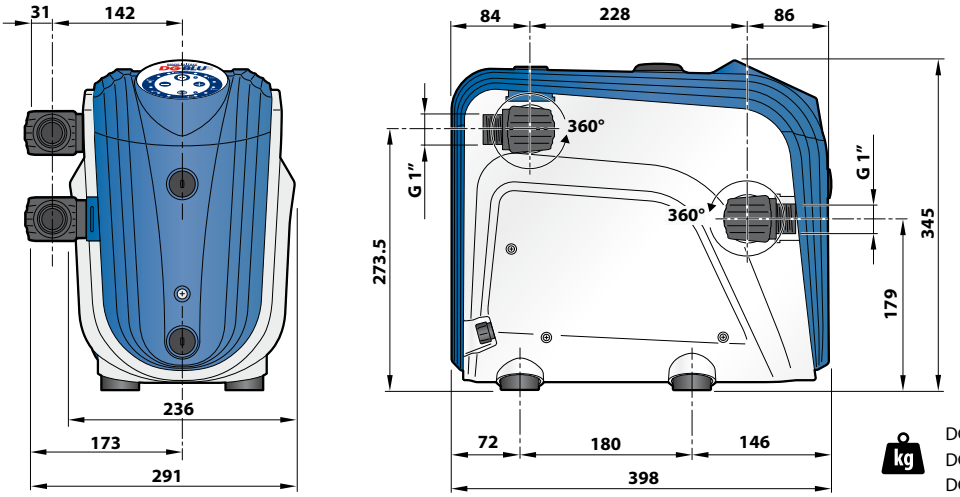

DG-BLU 2: **14 kg**
DG-BLU 3: **15 kg**
DG-BLU 5: **16 kg**

DUAL DG-BLU DIMENSIONS AND WEIGHTS (mm)

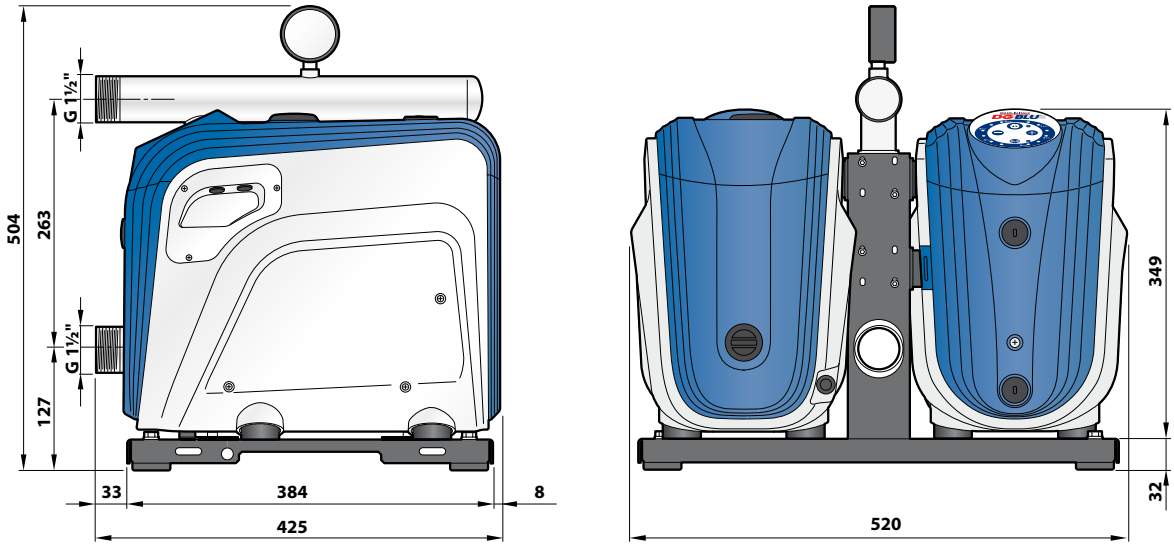

DUAL DG-BLU 2+2: **40 kg**
DUAL DG-BLU 3+3: **43 kg**
DUAL DG-BLU 3+5: **44 kg**
DUAL DG-BLU 5+5: **45 kg**

OPTIONAL ACCESSORIES

Connection kit for two DG-BLU units

Electronic expansion board

Kit for wall installation of a single DG-BLU

Wall installation kit of a two-unit group